Technical Data

User interface
7" touchscreen portrait orientation

Grinder
1 or 2 girinders
Ø64mm

Brewing Group Capacity
BC18 (18g)
optional BC22 (22g)

Coffee Hopper Volume
1.4kg or 2x 0.7kg

Coffee Boiler Volume
0.5l

DripTray Volume
1.2l

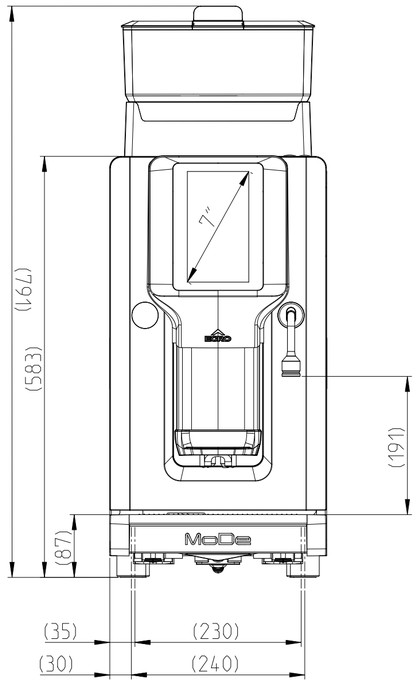

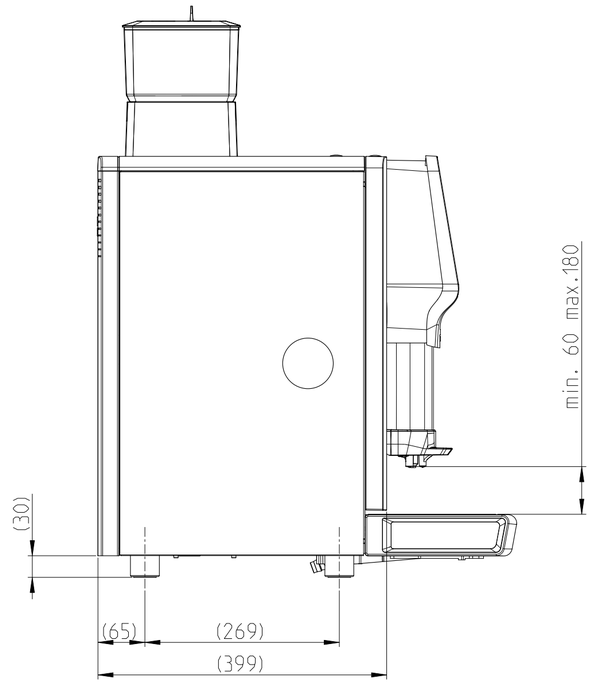

drilling plan 1:6

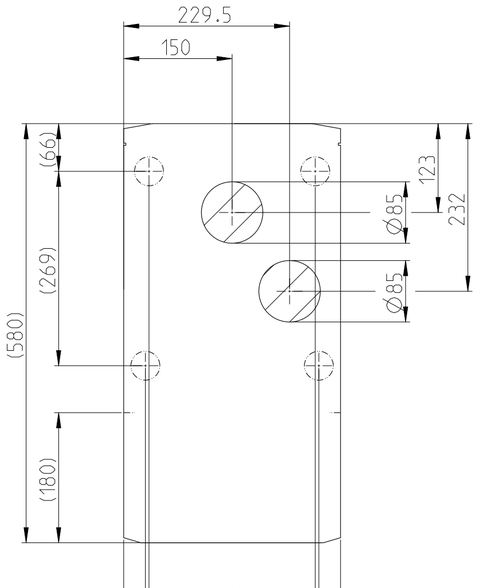

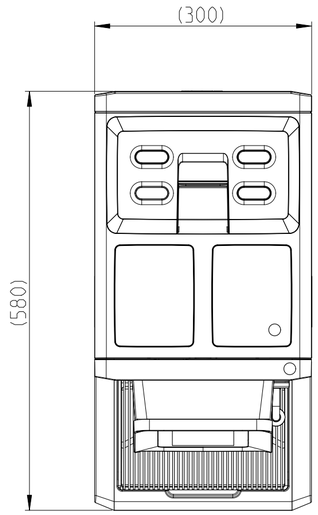

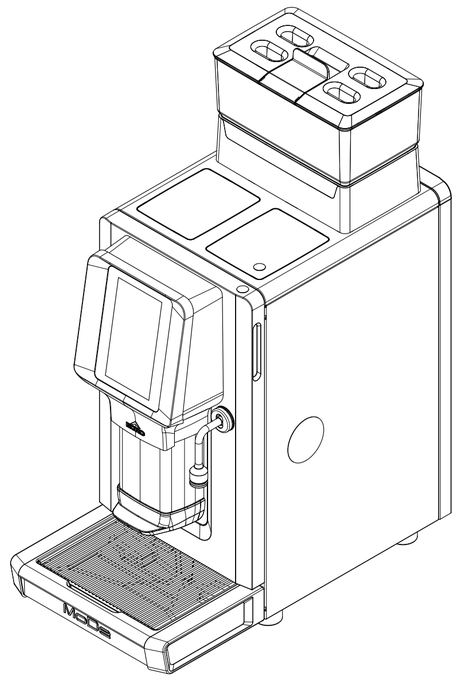

drilling plan available seperatly - PD_0070

REV	CHANGE DESCRIPTION	DATE	DRAFTER	CTI

MODIFICATIONS

THIS DOCUMENT IS IN ACCORDANCE TO : - ISO 2768 mK

METRIC
DIMENSIONS SHOWN IN MM

Rancilio Group spa
Viale della Repubblica 40 20010 Villastanza di Parabiago -MI- Italia Tel +39 0331 408200 - Fax +39 0331 551437
www.rancilio.com
www.egrocoffee.com

All proprietary rights reserved by Rancilio Group S.p.A. This drawing shall not be reproduced, or in any way utilized, for the manufacture of the component or unit herein illustrated and must not be released to other parties, without written consent. Any infringement will be legally pursued

DRAFTER bti	CHECKER S.R.	MATERIAL		
CTI	DATE 02.11.2022	TREATMENT		
PROJECT MODE	LAST ISSUE DATE 02.11.2022	SURF FINISH		
DWG NUMBER PD_0071		DRAWING NAME MODE PURE COFFEE MAEF01		
DWG STATUS Released	REV --	SCALE 1:6	SIZE A2	SHEET 1 of 1

RANCILIO GROUP PROPOSTA ENGINEERING DESIGN AREA

CAD DRAWING. HANDLING ON CAD SISTEM ONLY